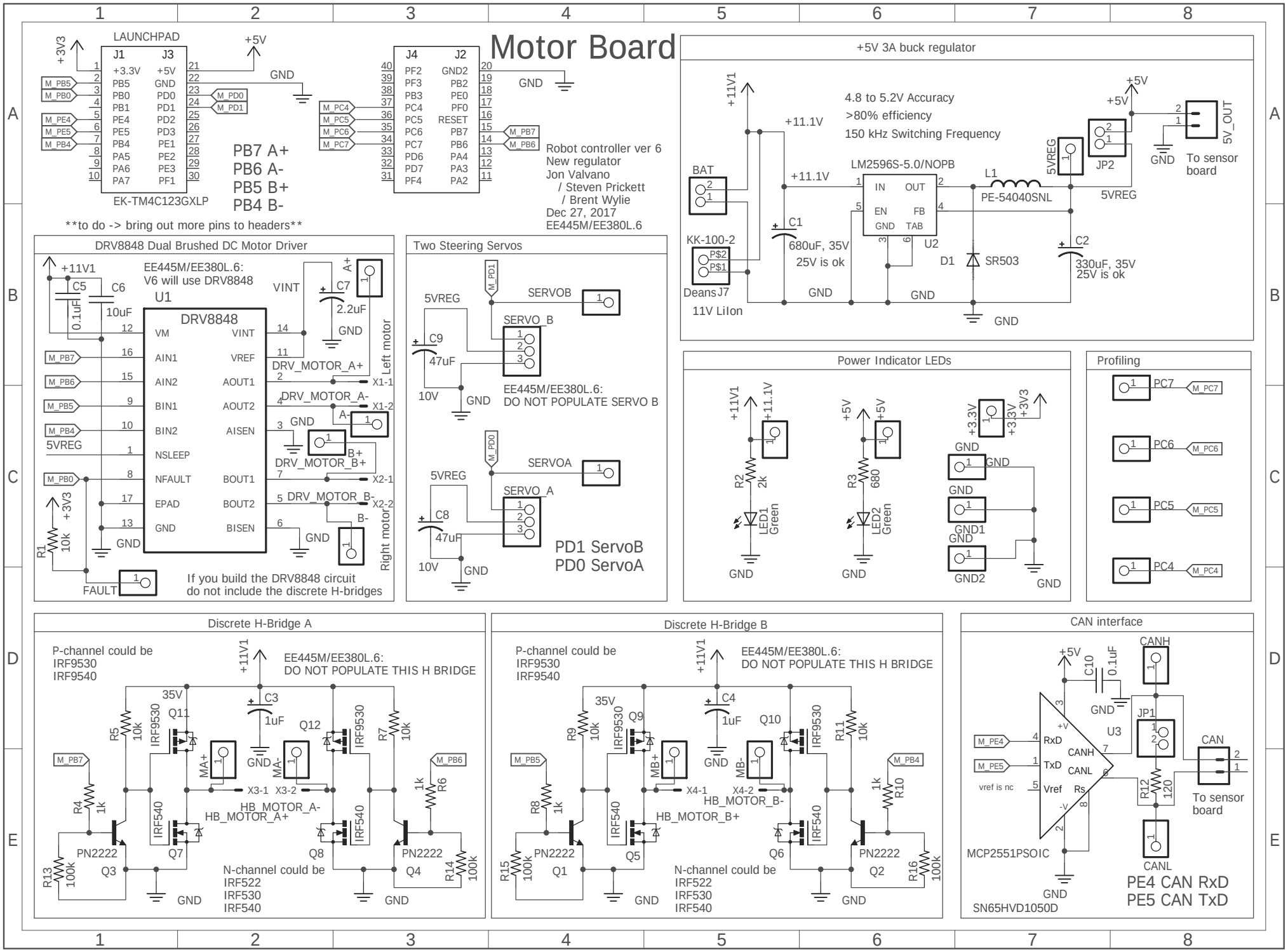
Motor Board
LAUNCHPAD
J1 J3
+3.3V +5V
PB5 GND
PB0 PD0
PB1 PD1
PE4 PD2
PE5 PD3
PB4 PE1
PA5 PE2
PA6 PE3
PA7 PF1
EK-TM4C123GXLP
J4 J2
PF2 GND2
PF3 PB2
PB3 PE0
PC4 PF0
PC5 RESET
PC6 PB7
PC7 PB6
PD6 PA4
PD7 PA3
PF4 PA2
PB7 A+
PB6 A-
PB5 B+
PB4 B-
to do -> bring out more pins to headers
Robot controller ver 6
New regulator
Jon Valvano
/ Steven Prickett
/ Brent Wylie
Dec 27, 2017
EE445M/EE380L.6
+5V 3A buck regulator
4.8 to 5.2V Accuracy
>80% efficiency
150 kHz Switching Frequency
LM2596S-5.0/NOPB
IN OUT
EN FB
GND TAB
L1
PE-54040SNL
BAT
KK-100-2
Deans J7
11V LiIon
C1
680uF, 35V
25V is ok
C2
330uF, 35V
25V is ok
D1
SR503
5VREG
JP2
5V_OUT
To sensor board
DRV8848 Dual Brushed DC Motor Driver
EE445M/EE380L.6:
V6 will use DRV8848
U1
DRV8848
VM VINT
AIN1 VREF
AIN2 AOUT1
BIN1 AOUT2
BIN2 AISEN
NSLEEP
NFAULT BOUT1
EPAD BOUT2
GND BISEN
DRV_MOTOR_A+
DRV_MOTOR_A-
DRV_MOTOR_B+
DRV_MOTOR_B-
Left motor
Right motor
FAULT
If you build the DRV8848 circuit
do not include the discrete H-bridges
Two Steering Servos
SERVOB
SERVO_B
EE445M/EE380L.6:
DO NOT POPULATE SERVO B
SERVOA
SERVO_A
PD1 ServoB
PD0 ServoA
Power Indicator LEDs
LED1 Green
LED2 Green
Profiling
Discrete H-Bridge A
P-channel could be
IRF9530
IRF9540
EE445M/EE380L.6:
DO NOT POPULATE THIS H BRIDGE
HB_MOTOR_A-
HB_MOTOR_A+
N-channel could be
IRF522
IRF530
IRF540
PN2222
Discrete H-Bridge B
HB_MOTOR_B-
HB_MOTOR_B+
CAN interface
MCP2551PSOIC
SN65HVD1050D
vref is nc
CAN
To sensor board
PE4 CAN RxD
PE5 CAN TxD