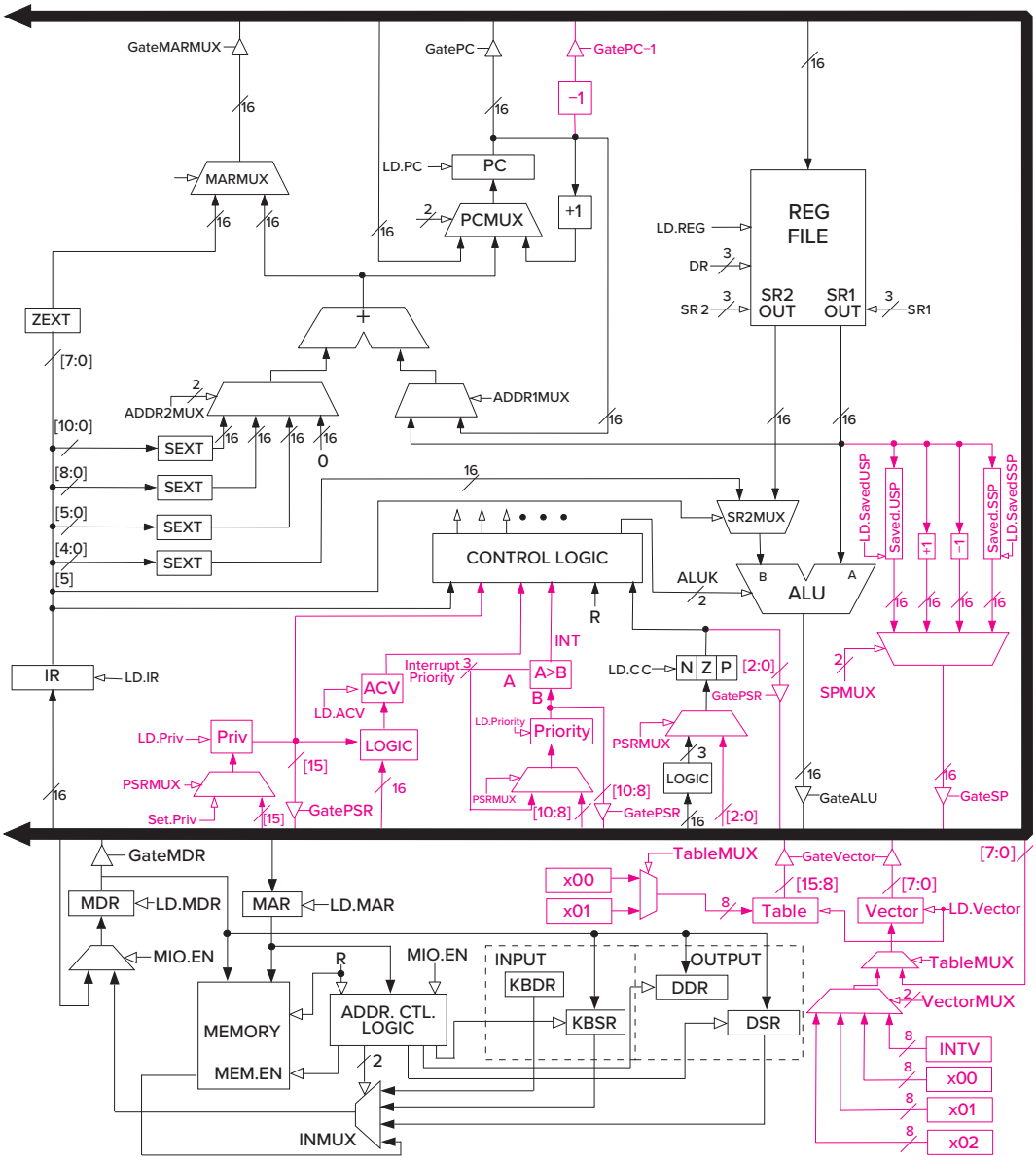

Figure C.8 LC-3 data path, including additional structures for interrupt control.

Section C.7.1 describes the flow of processing required to initiate an interrupt. Section C.7.3 describes the flow of processing required to initiate an exception.

C.7.1 Initiating an Interrupt

While a program is executing, an interrupt can be requested by some external event so that the normal processing of instructions can be preempted and the control can turn its attention to processing the interrupt. The external event requests