[EE381V/CS395T] Unconventional Computing

Graduate Course :: Spring 2021 Prof. David Soloveichik

There is a world of computation outside of electronic devices: in every biological cell, in your head, in cutting-edge laboratories trying to create DNA computers and quantum computers. Such unconventional computation inspires new models of computing beyond traditional models of boolean circuits and automata. This class exposes you to new perspectives on computation: models of highly distributed and unstructured computation such as that occurring in chemical reactions, models in which building is equivalent to computing, models that address the ultimate limits of low energy computation, and models that compute by relaxing to the lowest energy state. We will also cover the basics of quantum computing, and, if time permits, neural computation (not learning). The course will focus on proving important properties of the various models, and on how to use the models to achieve desired computational behavior.

Prerequisites

Experience with mathematical proofs (e.g., discrete math, algorithms)
Helpful: undergraduate course in probability, basic differential equations
No physics, chemistry, or biology background needed

Grading

Homework (65%), Project (30%), Class participation (5%)

Major Topics

1. Extreme distributed computing: Population Protocols, Chemical Reaction Networks, Cellular Automata
2. "To build is to compute": Algorithmic Tile Assembly Model
3. "You'll get there, don't worry how": Hopfield networks, Protein Folding, Thermodynamic Binding Networks
4. Computing without using energy: Reversible Computing
5. Foundations of Quantum Computing

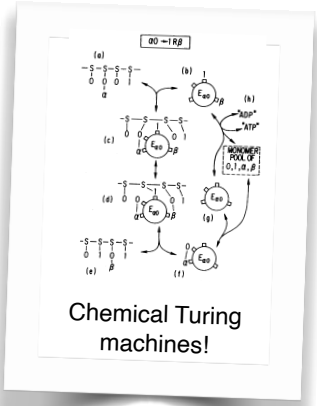

Chemical Turing machines!

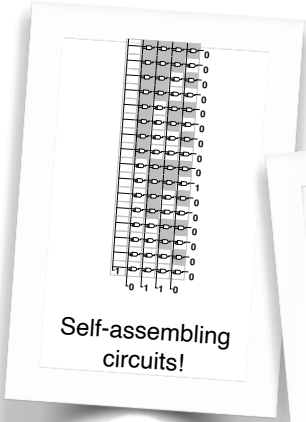

Self-assembling circuits!

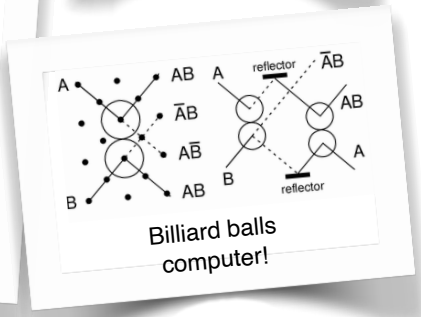

Billiard balls computer!

$X + Y \rightarrow X + B$
$X + Y \rightarrow B + Y$
$X + B \rightarrow X + X$
$Y + B \rightarrow Y + Y$

Chemical caucusing (majority wins!)

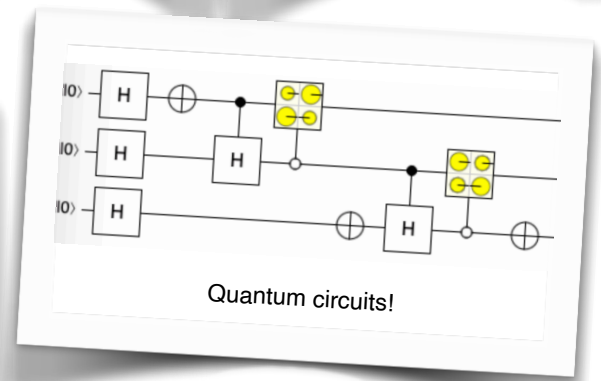

Quantum circuits!